SS-TB6080

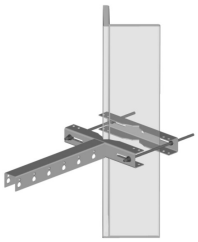

Star Support Tee Bracket for 4 in to 10-3/4 in OD round members and 4 in to 8 in angle members

Product Classification

Product Type	Star Support Bracket

General Specifications

Cable Runs, quantity	12
Hole, quantity	12
Mounting	Angle members, 101.6–203.2 mm (4–8 in) | Round member, 101.6–273.05 mm (4 in to 10-3/4 in) OD

Dimensions

Height	101.6 mm | 4 in
Width	304.8 mm | 12 in
Length	254 mm | 10 in
Mounting Diameter 2, maximum	203.2 mm | 8 in
Mounting Diameter 2, minimum	101.6 mm | 4 in
Mounting Diameter, maximum	274.32 mm | 10.8 in
Mounting Diameter, minimum	101.6 mm | 4 in
Hole Size	3/4 in | 7/16 in

©2024 CommScope, Inc. All rights reserved. CommScope and the CommScope logo are registered trademarks of CommScope and/or its affiliates in the U.S. and other countries. For additional trademark information see https://www.commscope.com/trademarks. All product names, trademarks and registered trademarks are property of their respective owners. Revised: May 14, 2024

SS-TB6080

Outline Drawing

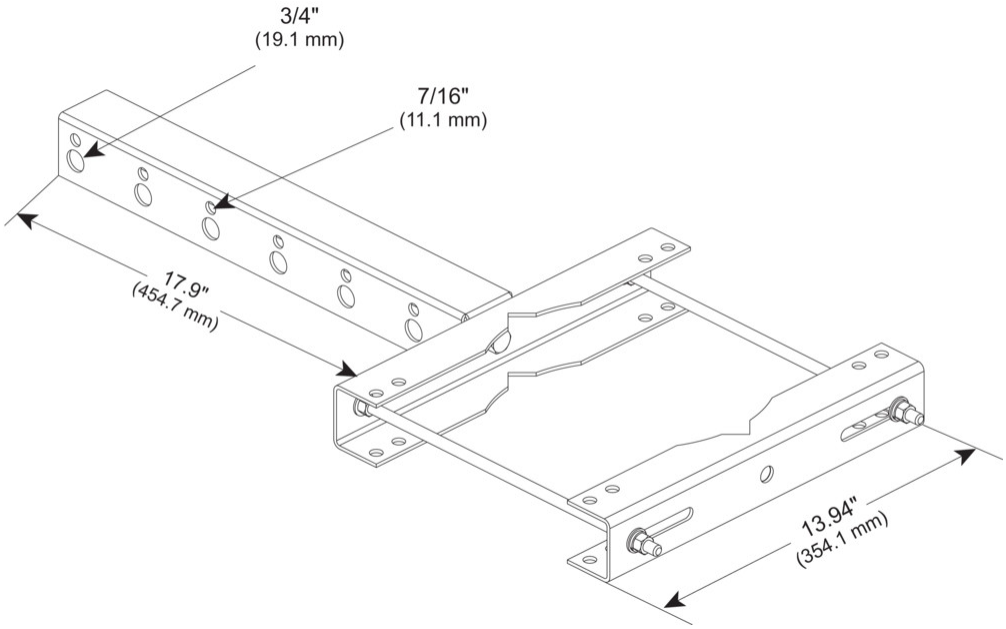

Material Specifications

Material Type	Hot dip galvanized steel

Packaging and Weights

Included	Brackets
Packaging quantity	1
Weight, net	4.5 kg | 9.921 lb

Regulatory Compliance/Certifications

Agency	Classification
ISO 9001:2015	Designed, manufactured and/or distributed under this quality management system
REACH-SVHC	Compliant as per SVHC revision on www.commscope.com/ProductCompliance
ROHS	Compliant
UK-ROHS	Compliant

Included Products

SS-TB – Star Support Tee Bracket

©2024 CommScope, Inc. All rights reserved. CommScope and the CommScope logo are registered trademarks of CommScope and/or its affiliates in the U.S. and other countries. For additional trademark information see https://www.commscope.com/trademarks. All product names, trademarks and registered trademarks are property of their respective owners. Revised: May 14, 2024