LS2HM-D

4.3-10 Male for LSF2-50 cable

Product Classification

Product Type	Wireless and radiating connector
Product Brand	HELIAX®
Product Series	LSF2-50 | MLOC

General Specifications

Body Style	Straight
Cable Family	FSJ2-50
Inner Contact Attachment Method	Captivated
Inner Contact Plating	Silver
Interface	4.3-10 Male
Mounting Angle	Straight
Outer Contact Attachment Method	Crush-flare
Outer Contact Plating	Trimetal

Dimensions

Length	59.69 mm | 2.35 in
Diameter	23.88 mm | 0.94 in
Nominal Size	3/8 in

Outline Drawing

©2024 CommScope, Inc. All rights reserved. CommScope and the CommScope logo are registered trademarks of CommScope and/or its affiliates in the U.S. and other countries. For additional trademark information see https://www.commscope.com/trademarks. All product names, trademarks and registered trademarks are property of their respective owners. Revised: April 2, 2024

LS2HM-D

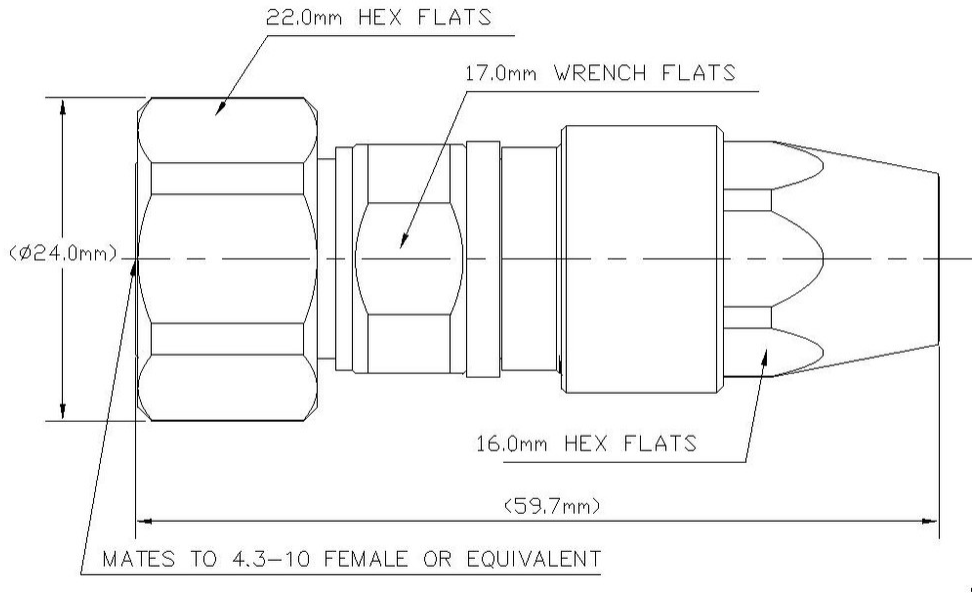

Electrical Specifications

3rd Order IMD at Frequency	-116 dBm @ 1800 MHz
3rd Order IMD Dynamic Test Method	Two +43 dBm carriers
3rd Order IMD Dynamic, typical	-116 dB
Insertion Loss Coefficient, typical	0.05
Average Power at Frequency	500.0 W @ 900 MHz
Cable Impedance	50 ohm
Connector Impedance	50 ohm
dc Test Voltage	2300 V
Inner Contact Resistance, maximum	1 mOhm
Insulation Resistance, minimum	5000 MOhm
Operating Frequency Band	0 – 6000 MHz
Outer Contact Resistance, maximum	1 mOhm
Peak Power, maximum	15 kW
RF Operating Voltage, maximum (vrms)	707 V
Shielding Effectiveness	-110 dB

©2024 CommScope, Inc. All rights reserved. CommScope and the CommScope logo are registered trademarks of CommScope and/or its affiliates in the U.S. and other countries. For additional trademark information see https://www.commscope.com/trademarks. All product names, trademarks and registered trademarks are property of their respective owners. Revised: April 2, 2024

VSWR/Return Loss

Frequency Band	VSWR	Return Loss (dB)
45–3000 MHz	1.041	33.94
3000–6000 MHz	1.083	27.99

Mechanical Specifications

Attachment Durability	25 cycles
Connector Retention Tensile Force	200.17 N | 45 lbf
Connector Retention Torque	2.2 N-m | 19.472 in lb
Coupling Nut Proof Torque	10 N-m | 88.507 in lb
Coupling Nut Retention Force	449.98 N | 101.16 lbf
Interface Durability	100 cycles
Interface Durability Method	IEC 61169-4:9.5
Mechanical Shock Test Method	IEC 60068-2-27

Environmental Specifications

Operating Temperature	-55 °C to +85 °C (-67 °F to +185 °F)
Storage Temperature	-55 °C to +85 °C (-67 °F to +185 °F)
Attenuation, Ambient Temperature	20 °C | 68 °F
Average Power, Ambient Temperature	40 °C | 104 °F
Corrosion Test Method	IEC 60068-2-11
Immersion Depth	1 m
Immersion Test Mating	Mated
Immersion Test Method	IEC 60529:2001, IP68
Moisture Resistance Test Method	IEC 60068-2-3
Thermal Shock Test Method	IEC 60068-2-14
Vibration Test Method	IEC 60068-2-6
Water Jetting Test Mating	Mated
Water Jetting Test Method	IEC 60529:2001, IP66

Packaging and Weights

Weight, net	80.13 g | 0.177 lb

©2024 CommScope, Inc. All rights reserved. CommScope and the CommScope logo are registered trademarks of CommScope and/or its affiliates in the U.S. and other countries. For additional trademark information see https://www.commscope.com/trademarks. All product names, trademarks and registered trademarks are property of their respective owners. Revised: April 2, 2024

Regulatory Compliance/Certifications

Agency	Classification
ISO 9001:2015	Designed, manufactured and/or distributed under this quality management system

* Footnotes

Insertion Loss Coefficient, typical	0.05√¯freq (GHz) (not applicable for elliptical waveguide)
Immersion Depth	Immersion at specified depth for 24 hours

©2024 CommScope, Inc. All rights reserved. CommScope and the CommScope logo are registered trademarks of CommScope and/or its affiliates in the U.S. and other countries. For additional trademark information see https://www.commscope.com/trademarks. All product names, trademarks and registered trademarks are property of their respective owners. Revised: April 2, 2024