1.0 GENERAL NOTES
1.1 ALL METRIC DIMENSIONS ARE IN BRACKETS [X.XX]
2.0 DESIGN NOTES
3.0 MANUFACTURING/SPECIAL REQUIREMENTS
3.1 ITEM3-7 INCLUDED IN HARDWARE KIT SSTB6080H.
3.2 TIGHTEN ALL BOLTS SECURING FLAT PLATES BY THE TURN-OF-NUT METHOD. TIGHTEN ALL U-BOLTS USING TURN-OF-NUT METHOD WITH ATTENTION TO LEAVE EQUAL DISTANCE AND EQUAL FORCE ON EACH LEG OF THE U-BOLT.
4.0 TEST
5.0 PACKAGING
5.1 PACKAGING SHALL MEET COMMSCOPE REQUIREMENTS PER DOCUMENT IS-PL-3005.
5.2 PRINTED DOCUMENT TO BE PLACED INSIDE POLYBAG AND THEN IN SHIPPING CONTAINER.
5.3 EXTRA HARDWARE MAYBE SUPPLIED, BAGGED AND SHIPPED.

REVISIONS			
REV.	DESCRIPTION	DATE	APPROVED
A	INITIAL RELEASE	MA 18MAY01	
B	UPDATE PART LIST	CAM 08NOV01	
C	UPDATE PART LIST	ACG 19SEP03	
D	REMOVED ITEM 3 (SSTB6080H) FROM DRAWING BOM	YH1102 25AUG22	BCROSS 40155297CMO

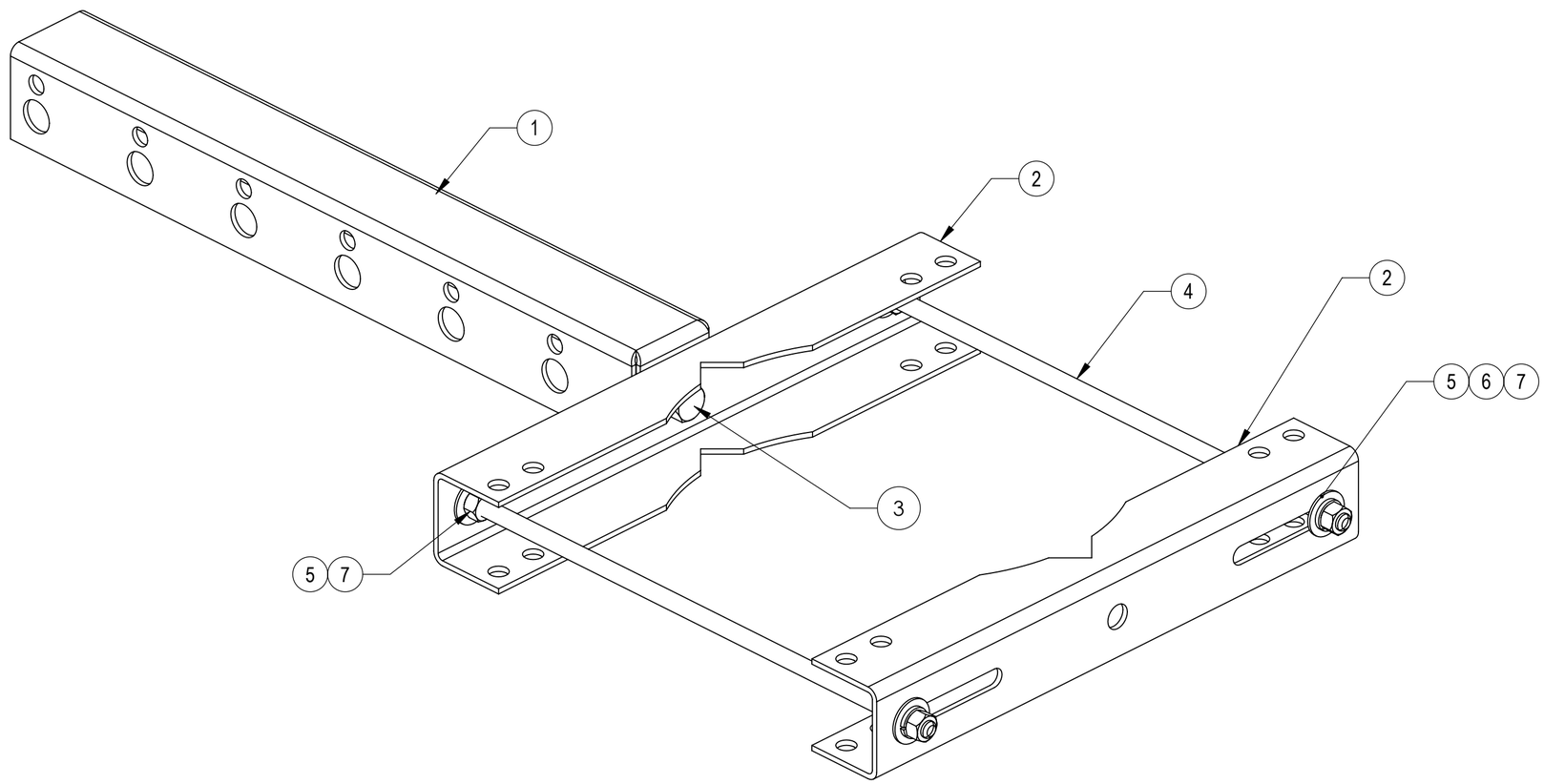

COMPONENT PART NUMBERS PROVIDED FOR ASSEMBLY PURPOSES;
INDIVIDUAL COMPONENTS MAY BE SHIPPED AS PARTS WITHIN AN INCLUDED KIT.

ITEM	PART NO.	DESCRIPTION	QTY.	WEIGHT	NOTE NO.
1	SSTB.02	STAR SUPPORT TEE BRACKET	1	3.63 LBS	
2	SS6080.01	STAR SUPPORT CLAMP	2	2.43 LBS	
3	GB-04105	1/2" X 1" GALV BOLT KIT	1	0.10 LBS	
4	TLSA6080.03	3/8" X 14" GALV THREADED ROD	2	0.44 LBS	
5	GWF-03	3/8" GALV FLAT WASHER	6	0.01 LBS	
6	GWL-03	3/8" GALV LOCK WASHER	4	0.01 LBS	
7	GN-03	3/8" GALV HEX NUT	6	0.02 LBS	

© 2022 CommScope, Inc. Confidential

DENSITY		lbs/in³
MASS	9.72	lbs
VOLUME	34.49	in³
SURFACE AREA	583.22	in²
HEIGHT	13.94[354.0]	
LENGTH	31.52[800.7]	
WIDTH	2.41[61.2]	

COMMSCOPE, INC. OF NORTH CAROLINA

TOLERANCES
1 PLACE .X[.X] ± 0.06[1.5]
2 PLACE .XX[.X] ± 0.03[0.8]
3 PLACE .XXX[.X] ± 0.010[0.3]
ANGLES ± 2°

SAP MATERIAL MASTER: SS-TB6080

FINISH

MATERIAL

UNLESS OTHERWISE SPECIFIED DIMENSIONS ARE IN INCHES INTERPRET PER ANSI Y 14.5M-1994

	NAME	DATE
CE	ACG	22APR05
RW	YH1102	08/29/2022
AD	BCROSS	09/03/2022
RE	YMENG	09/23/2022
ECN	40155297CMO	

TITLE: STAR SUPPORT TEE BRACKET

SCALE: 1:1

DOCUMENT NO.: SS-TB6080

SIZE: C

Auth Group: INSL

MODEL			DRAWING			SHEET
VERSION	STATUS	REVISION	VERSION	STATUS	REVISION	
01	RE	D	01	RE	D	1 OF 1