NOTES:

1.0 ALL METRIC DIMENSIONS ARE IN BRACKETS.

| REVISIONS | | | | |
|---|---|---|---|---|
| REV. | ECN | DESCRIPTION | BY | DATE |
| A | 8000028694 | INITIAL RELEASE | MRC | 03/01/18 |

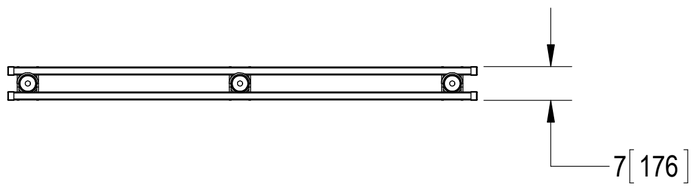


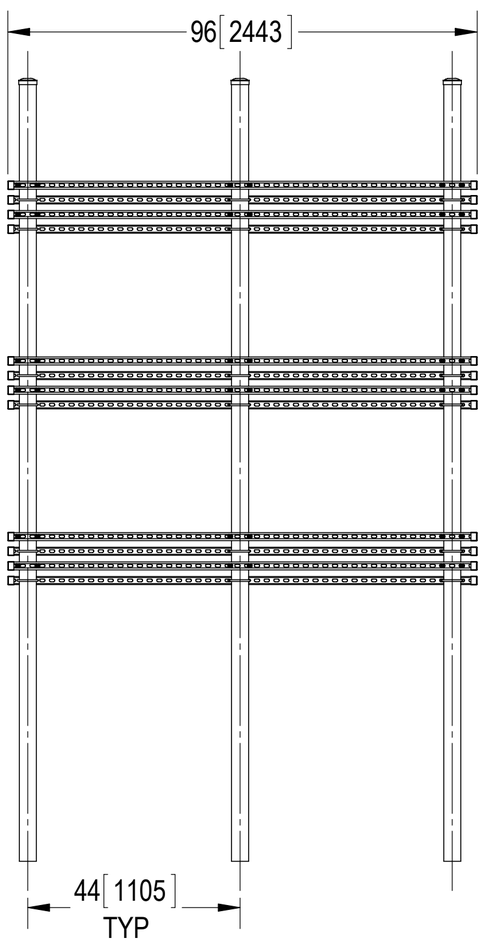


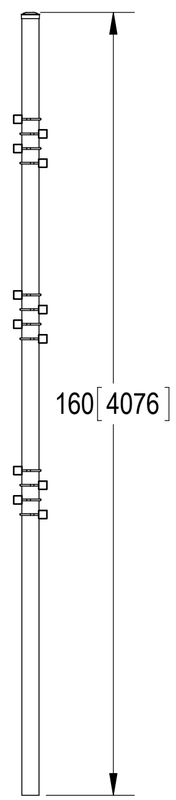


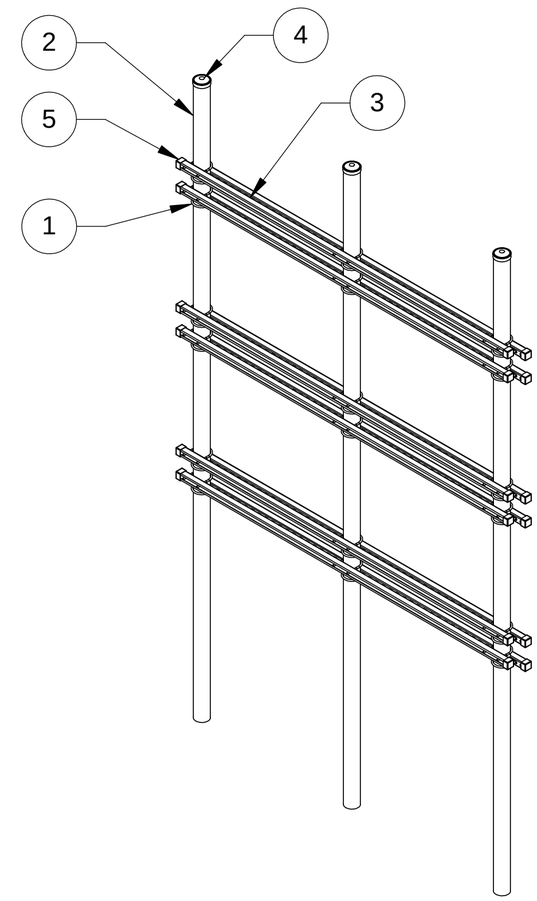


| ITEM | PART NO. | DESCRIPTION | QTY. | WEIGHT | NOTE NO. |
|---|---|---|---|---|---|
| 1 | GUB-3355 | 3/8" X 3-5/8" X 5-1/4" GALV U-BOLT | 36 | 0.40 LBS | |
| 2 | MF130165 | 3-1/2" O.D. X 160" L SCH 40 PIPE | 3 | 78.64 LBS | |
| 3 | MT50496 | SQUARE SUPPORT RAIL, 12 GA, SLOTTED, 96" | 12 | 13.89 LBS | |
| 4 | PC-034 | ∅3½" PIPE CAP | 3 | 0.54 LBS | |
| 5 | PTCR01 | END CAP | 24 | 0.05 LBS | |

| | | |
|---|---|---|
| DENSITY | 0.28 | lbs/in³ |
| MASS | 422.38 | lbs |
| VOLUME | 1505.71 | in³ |
| SURFACE AREA | | in² |
| HEIGHT | | |
| LENGTH | | |
| WIDTH | | |

# COMMSCOPE, INC. OF NORTH CAROLINA

TOLERANCES

0 PLACE X ± .25 | 2 PLACE .XX ± .06

1 PLACE .X ± .12 | ANGLES ± 2°

SAP MATERIAL MASTER: **MTC401596H**

FINISH: GALV A123

MATERIAL: A500, A568

UNLESS OTHERWISE SPECIFIED DIMENSIONS ARE IN MILLIMETERS INTERPRET PER ISO STANDARDS HANDBOOK:TECHNICAL DRAWINGS, VOLUMES 1 & 2, THIRD EDITION (2002)

| | NAME | DATE |
|---|---|---|
| CE | MRC | 11/14/17 |
| RW | | |
| RV | | |
| AD | | |
| RE | TP | 11/14/17 |
| ECN | 8000028694 | |

TITLE: **H-FRAME, 3 POSTS, 12 UNISTRUT**

SCALE: **1:24**

DOCUMENT NO.: **MTC401596H**

| SIZE | WORK AREA | MODEL VERSION | MODEL STATUS | MODEL REVISION | DRAWING VERSION | DRAWING STATUS | DRAWING REVISION | SHEET |
|---|---|---|---|---|---|---|---|---|
| C | | | | | | | A | 1 OF 1 |

© 2015 CommScope, Inc. Confidential