ANDREW® an Amphenol company

Installation Instructions

Compact SureGround Plus™ Version 2 Grounding Kit*

for Coaxial Cables

Andrew Institute offers installation training.

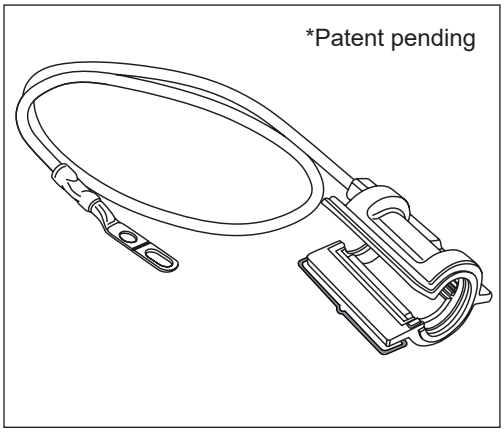

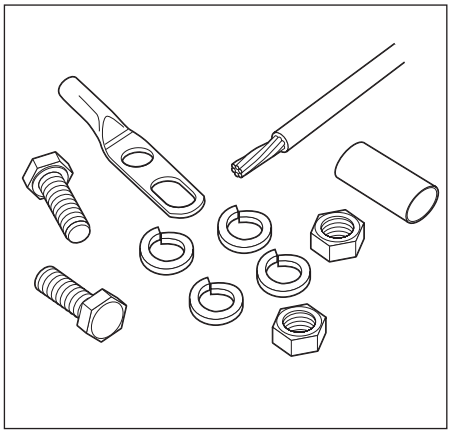

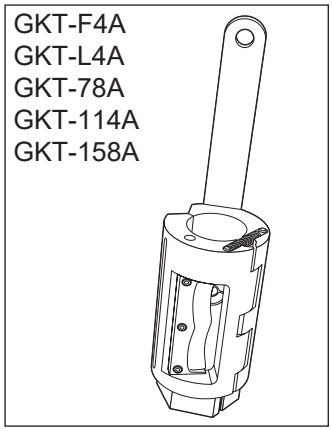

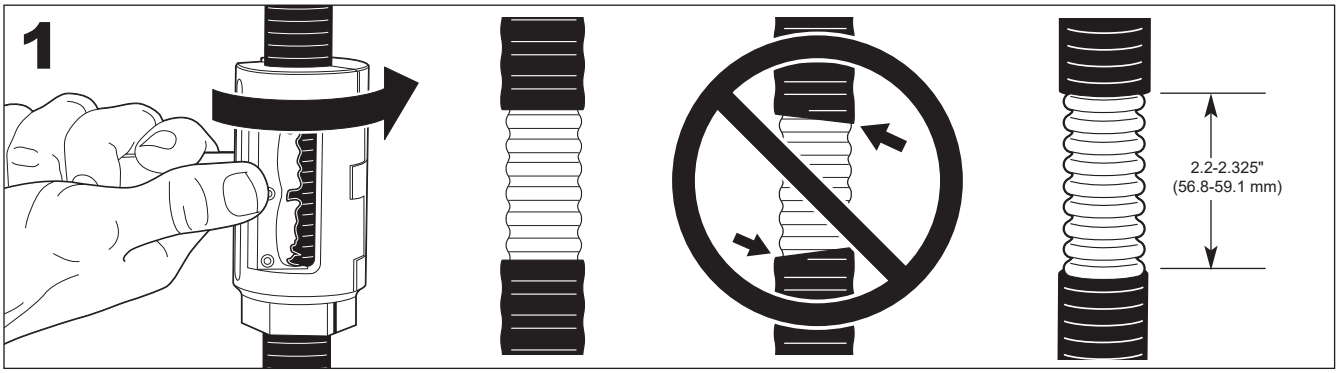

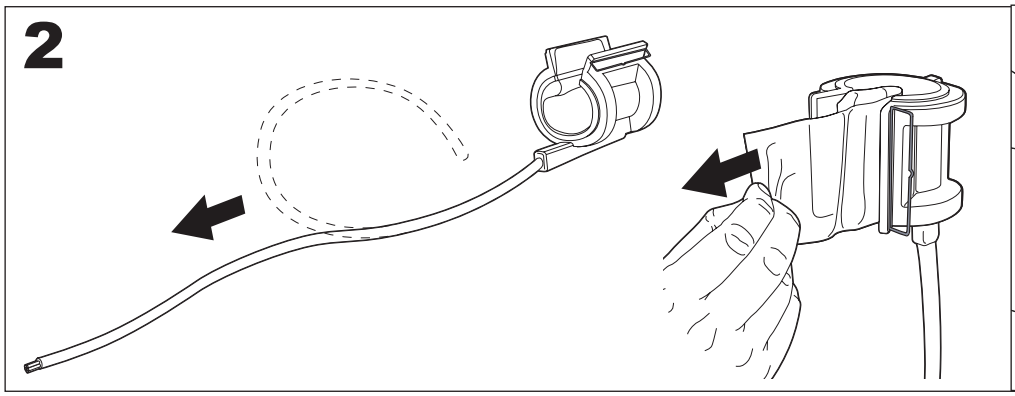

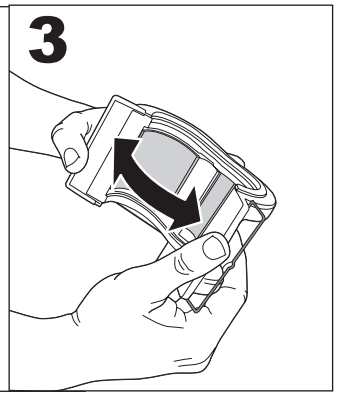

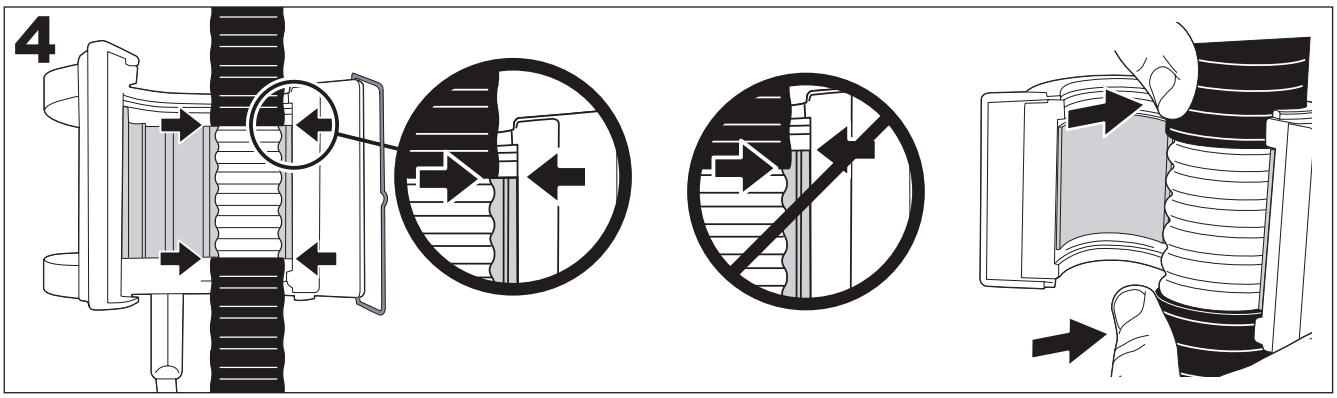

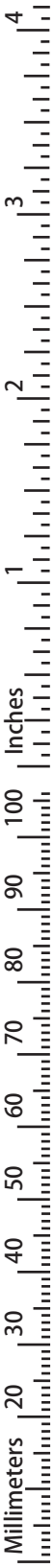

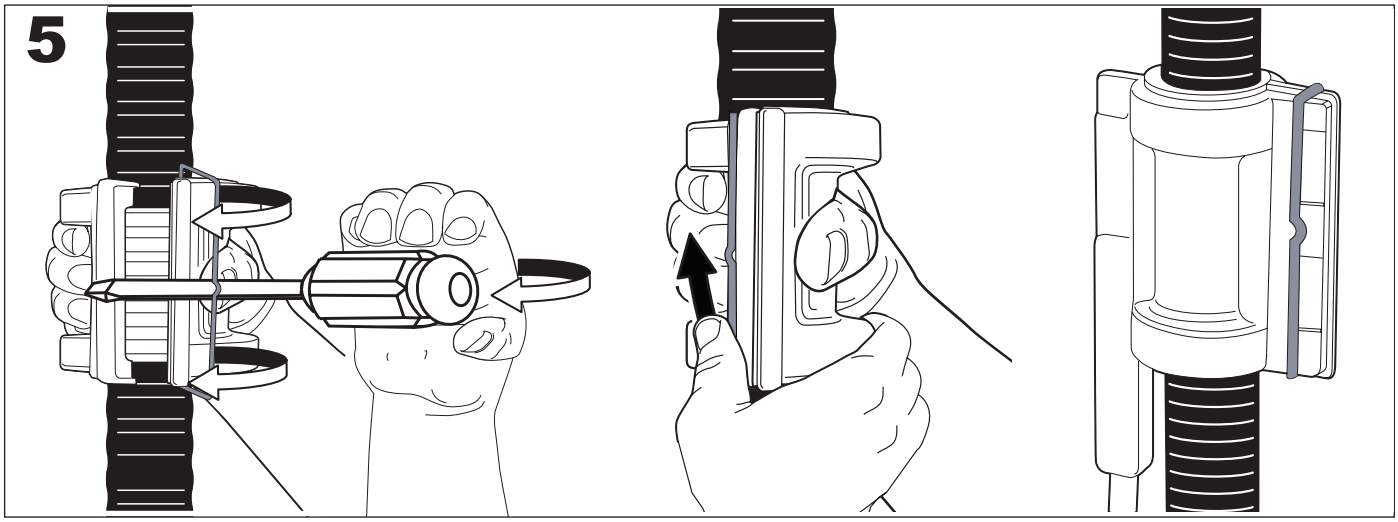

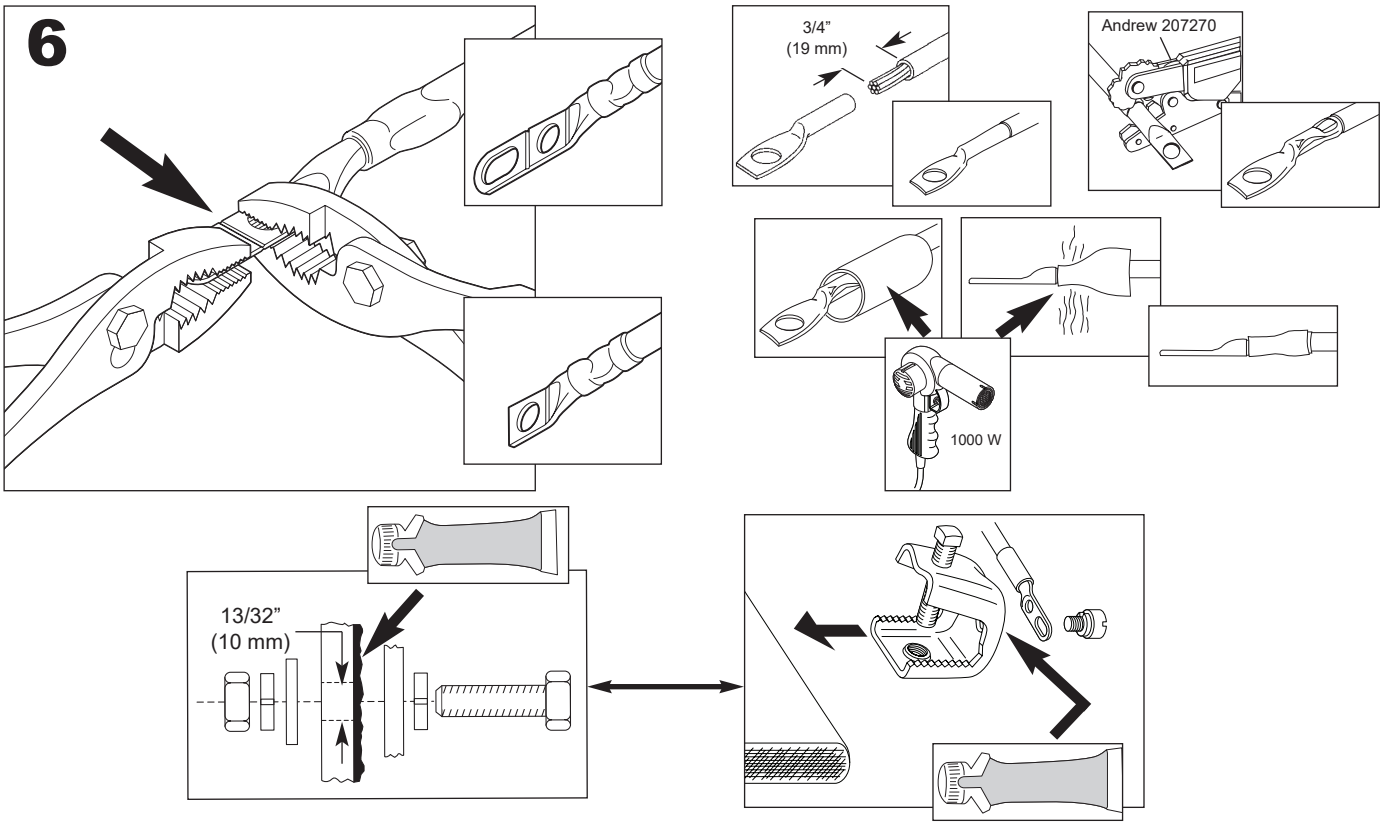

ANDREW an Amphenol company
2601 Telecom Parkway, Richardson, Texas, 75082, USA
www.andrew.com

Technical Support
+1 888 297 6433, Option 3 (Toll Free US and Canada)
awpnarsupport@andrew.com

Notice: ANDREW disclaims any liability or responsibility for the results of improper or unsafe installation, inspection, maintenance, or removal practices.
Aviso: ANDREW no acepta ninguna obligación ni responsabilidad como resultado de prácticas incorrectas o peligrosas de instalación, inspección, mantenimiento o retiro.
Avis : ANDREW décline toute responsabilité pour les conséquences de procédures d’installation, d’inspection, d’entretien ou de retrait incorrectes ou dangereuses.
Hinweis: ANDREW lehnt jede Haftung oder Verantwortung für Schäden ab, die aufgrund unsachgemäßer Installation, Überprüfung, Wartung oder Demontage auftreten.
Atenção: A ANDREW abdica do direito de toda responsabilidade pelos resultados de práticas inadequadas e sem segurança de instalação, inspeção, manutenção ou remoção.
Avvertenza: ANDREW declina eventuali responsabilità derivanti dell’esecuzione di procedure di installazione, ispezione, manutenzione e smontaggio improprie o poco sicure.
注意：ANDREW 公司申明對於不恰當或不安全的安裝、檢驗、維修或拆卸操作所導致的后果不負任 何義務和責任

©2025 ANDREW, an Amphenol company. All rights reserved. Amphenol and ANDREW are registered trademarks of Amphenol and/or its affiliates in the U.S. and other countries. All product names, trademarks and registered trademarks are property of their respective owners.