HX10-4-6GF

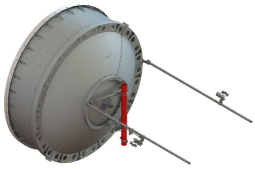

3.0m | 10ft ValuLine® High Performance, High XPD Antenna, dual-polarized, 4.400 – 5.000 GHz, grey, CPR187G flange

Product Classification

Product Type	Microwave antenna

General Specifications

Antenna Type	HX - ValuLine® High Performance, High XPD Antenna, dual-polarized
Polarization	Dual
Antenna Input	CPR187G
Antenna Color	Gray
Reflector Construction	Two-piece reflector
Radome Color	Gray
Radome Material	Fabric
Flash Included	Yes
Side Struts, Included	2
Side Struts, Optional	3

Dimensions

Diameter, nominal	3.0 m | 10 ft

Electrical Specifications

Operating Frequency Band	4.400 – 5.000 GHz
Gain, Low Band	40 dBi
Gain, Mid Band	40.6 dBi
Gain, Top Band	41.1 dBi
Boresite Cross Polarization Discrimination (XPD)	33 dB
Front-to-Back Ratio	68 dB
Beamwidth, Horizontal	1.5 °
Beamwidth, Vertical	1.5 °
Return Loss	23 dB

©2021 CommScope, Inc. All rights reserved. All trademarks identified by ® or ™ are registered trademarks, respectively, of CommScope. All specifications are subject to change without notice. See www.commscope.com for the most current information. Revised: November 2, 2021

VSWR	1.15
Radiation Pattern Envelope Reference (RPE)	7435
Electrical Compliance	ETSI 302 217 Class 3
Cross Polarization Discrimination (XPD) Electrical Compliance	ETSI EN 302217 XPD Category 2

Mechanical Specifications

Compatible Mounting Pipe Diameter	115 mm | 4.5 in
Fine Azimuth Adjustment Range	±5°
Fine Elevation Adjustment Range	±5°
Wind Speed, operational	180 km/h | 111.847 mph
Wind Speed, survival	200 km/h | 124.274 mph

©2021 CommScope, Inc. All rights reserved. All trademarks identified by ® or ™ are registered trademarks, respectively, of CommScope. All specifications are subject to change without notice. See www.commscope.com for the most current information. Revised: November 2, 2021

HX10-4-6GF

Antenna Dimensions and Mounting Information

USX10

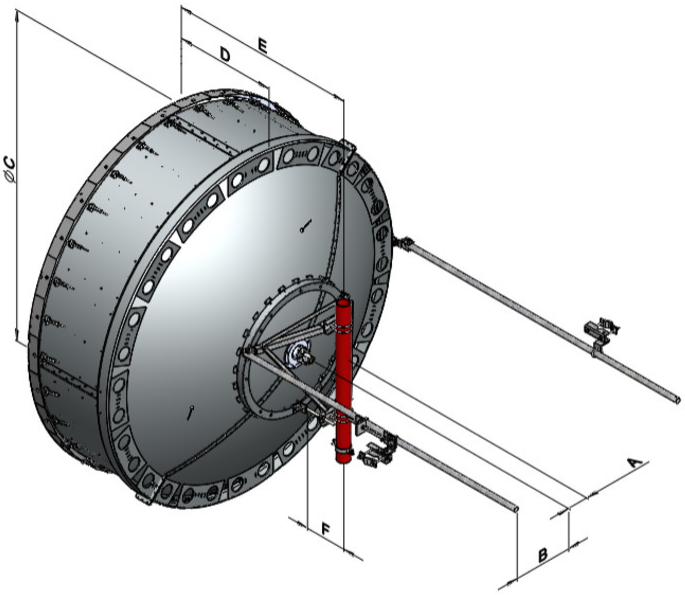

Dimensions in inches (mm)						
Antenna Size, ft (m)	A	B	C	D	E	F
10 (3)	8.0 (203)	22.5 (572)	125.0 (3174)	38.6 (980)	71.1 (1807)	10.3 (262)

Wind Forces at Wind Velocity Survival Rating

Axial Force (FA)	18800 N | 4,226.409 lbf
Angle a for MT Max	-130 °
Side Force (FS)	-6560 N | -1,474.747 lbf
Twisting Moment (MT)	-10725 N-m | -94,924.25 in lb
Force on Inboard Strut Side	9500 N | 2,135.686 lbf
Force on Outboard Strut Side	3350 N | 753.11 lbf
Zcg without Ice	618 mm | 24.331 in
Zcg with 1/2 in (12 mm) Radial Ice	744 mm | 29.291 in

©2021 CommScope, Inc. All rights reserved. All trademarks identified by ® or ™ are registered trademarks, respectively, of CommScope. All specifications are subject to change without notice. See www.commscope.com for the most current information. Revised: November 2, 2021

Weight with 1/2 in (12 mm) Radial Ice	466 kg | 1,027.353 lb

©2021 CommScope, Inc. All rights reserved. All trademarks identified by ® or ™ are registered trademarks, respectively, of CommScope. All specifications are subject to change without notice. See www.commscope.com for the most current information. Revised: November 2, 2021

HX10-4-6GF

Wind Forces at Wind Velocity Survival Rating Image

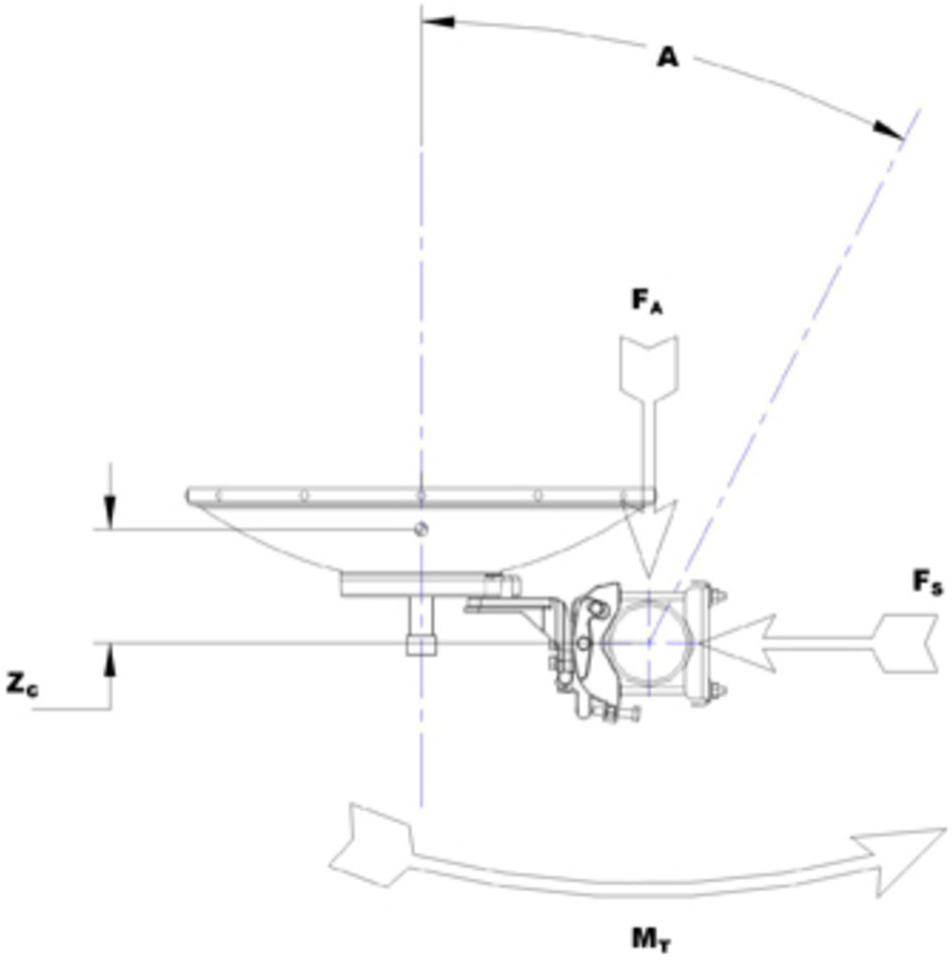

Packaging and Weights

Height, packed	1170 mm | 46.063 in
Width, packed	1930 mm | 75.984 in
Length, packed	3410 mm | 134.252 in
Packaging Type	Standard pack
Volume	7.7 m^3 | 271.923 ft^3
Weight, gross	513 kg | 1,130.97 lb
Weight, net	263 kg | 579.815 lb

Regulatory Compliance/Certifications

©2021 CommScope, Inc. All rights reserved. All trademarks identified by ® or ™ are registered trademarks, respectively, of CommScope. All specifications are subject to change without notice. See www.commscope.com for the most current information. Revised: November 2, 2021

HX10-4-6GF

Agency	Classification
ISO 9001:2015	Designed, manufactured and/or distributed under this quality management system

* Footnotes

Operating Frequency Band	Bands correspond with CCIR recommendations or common allocations used throughout the world. Other ranges can be accommodated on special order.
Gain, Mid Band	For a given frequency band, gain is primarily a function of antenna size. The gain of Andrew antennas is determined by either gain by comparison or by computer integration of the measured antenna patterns.
Boresite Cross Polarization Discrimination (XPD)	The difference between the peak of the co-polarized main beam and the maximum cross-polarized signal over an angle twice the 3 dB beamwidth of the co-polarized main beam.
Front-to-Back Ratio	Denotes highest radiation relative to the main beam, at 180° ±40°, across the band. Production antennas do not exceed rated values by more than 2 dB unless stated otherwise.
Return Loss	The figure that indicates the proportion of radio waves incident upon the antenna that are rejected as a ratio of those that are accepted.
VSWR	Maximum; is the guaranteed Peak Voltage-Standing-Wave-Ratio within the operating band.
Radiation Pattern Envelope Reference (RPE)	Radiation patterns define an antenna's ability to discriminate against unwanted signals. Under still dry conditions, production antennas will not have any peak exceeding the current RPE by more than 3dB, maintaining an angular accuracy of +/-1° throughout
Cross Polarization Discrimination (XPD) Electrical Compliance	The difference between the peak of the co-polarized main beam and the maximum cross-polarized signal over an angle twice the 3 dB beamwidth of the co-polarized main beam.
Wind Speed, operational	For VHLP(X), SHP(X), HX and USX antennas, the wind speed where the maximum antenna deflection is 0.3 x the 3 dB beam width of the antenna. For other antennas, it is defined as a deflection is equal to or less than 0.1 degrees.
Wind Speed, survival	The maximum wind speed the antenna, including mounts and radomes, where applicable, will withstand without permanent deformation. Realignment may be required. This

©2021 CommScope, Inc. All rights reserved. All trademarks identified by ® or ™ are registered trademarks, respectively, of CommScope. All specifications are subject to change without notice. See www.commscope.com for the most current information. Revised: November 2, 2021

	wind speed is applicable to antenna with the specified amount of radial ice.
Axial Force (FA)	Maximum forces exerted on a supporting structure as a result of wind from the most critical direction for this parameter. The individual maximums specified may not occur simultaneously. All forces are referenced to the mounting pipe.
Side Force (FS)	Maximum side force exerted on the mounting pipe as a result of wind from the most critical direction for this parameter. The individual maximums specified may not occur simultaneously. All forces are referenced to the mounting pipe.
Twisting Moment (MT)	Maximum forces exerted on a supporting structure as a result of wind from the most critical direction for this parameter. The individual maximums specified may not occur simultaneously. All forces are referenced to the mounting pipe.
Packaging Type	Andrew standard packing is suitable for export. Antennas are shipped as standard in totally recyclable cardboard or wire-bound crates (dependent on product). For your convenience, Andrew offers heavy duty export packing options.

©2021 CommScope, Inc. All rights reserved. All trademarks identified by ® or ™ are registered trademarks, respectively, of CommScope. All specifications are subject to change without notice. See www.commscope.com for the most current information. Revised: November 2, 2021