REVISIONS			
REV.	DESCRIPTION	DATE	APPROVED
A	ECR 40177363CMO: RELEASE TO PRODUCTION PER EAO 611933.	27MAR24 SP	AN/SAS
B	ECR 40193993CMO: MODEL UPDATE.	31MAY24 SP	AN/SAS

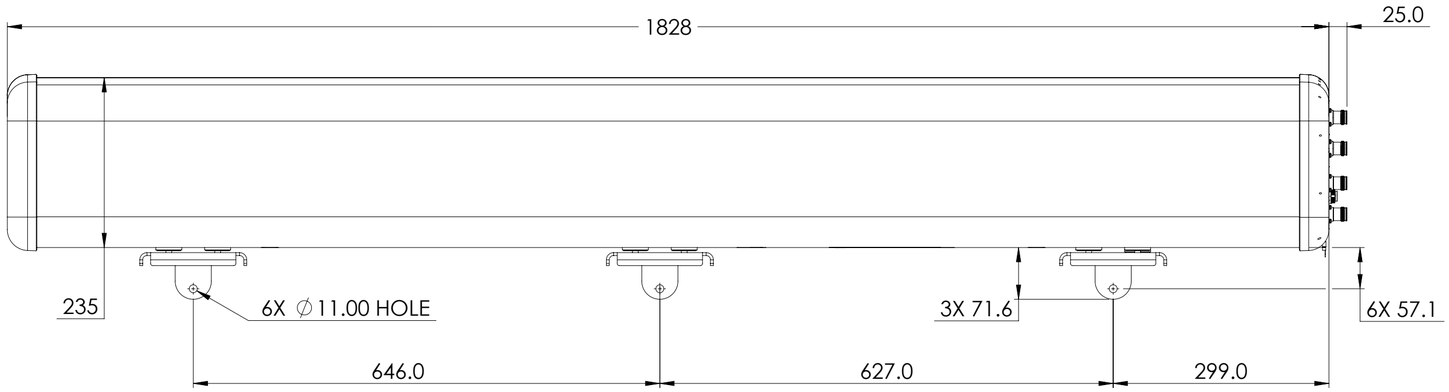

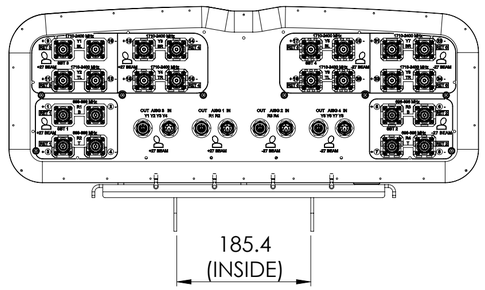

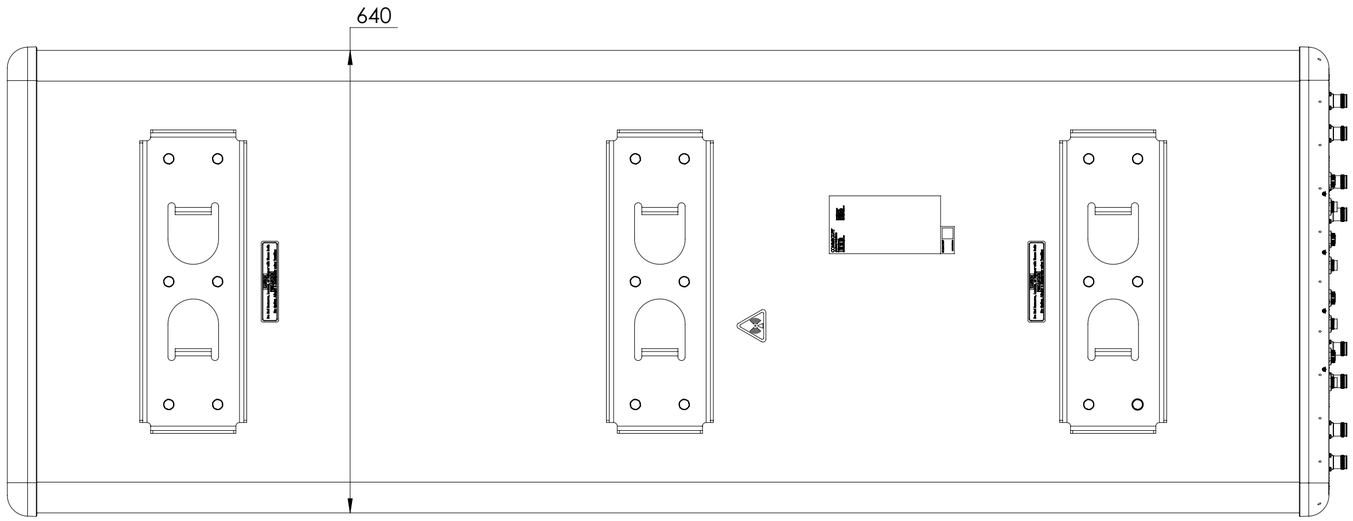

2NN2H4-33B-R6B

COMMSCOPE, INC. OF NORTH CAROLINA

TOLERANCES			
0 PLACE	X ±	2 PLACE	.XX ±
1 PLACE	.X ±	ANGLES	±

SAP MATERIAL MASTER

FINISH

MATERIAL

UNLESS OTHERWISE SPECIFIED DIMENSIONS ARE IN MILLIMETERS INTERPRET PER ISO STANDARDS HANDBOOK TECHNICAL DRAWINGS, VOLUMES 1 & 2, THIRD EDITION (2002)

	NAME	DATE
CE	PS1111	03/27/2024
RW	PS1111	05/31/2024
AD	AN1072	06/03/2024
RE	RK1070	06/03/2024
ECN	40193993CMO	

TITLE

PRODUCT DRAWING

SCALE 1:6

DOCUMENT NO. 2NN2H4-33B-R6B-L

DENSITY	g/mm³
MASS	grams
VOLUME	mm³
SURFACE AREA	mm²
HEIGHT	
LENGTH	
WIDTH	

SIZE A2

Auth Group BSA

MODEL			DRAWING			SHEET
VERSION	STATUS	REVISION	VERSION	STATUS	REVISION	
01	RE	B	01	RE	B	1 OF 1

© 2024 CommScope, Inc.